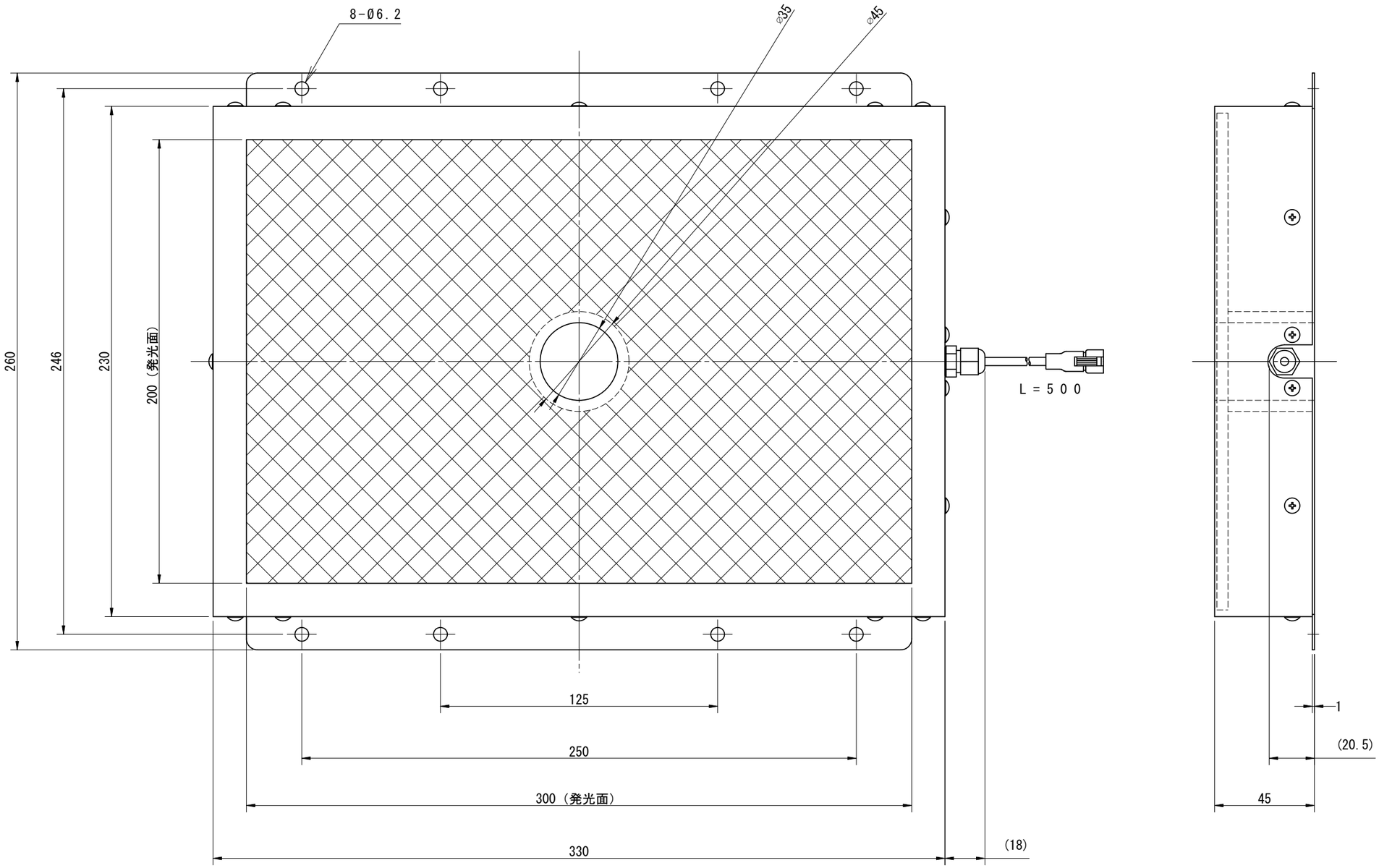HAYASHI-REPIC