HAYASHI-REPIC

LED Coaxial Light

HDVP-C32RGB-CP

Details of Connector

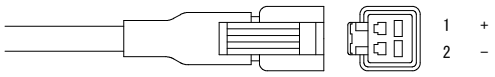

	Light	Power Supply
Connector	SMR-02V-B	SMP-02V-BC
Contact	BYM-001T-P0.6	BHF-001T-0.8SS

* Red LEDs : 1.2W
* Blue LEDs : 1.2W
* Green LEDs : 1.2W
* Only 12V USE

(Note)Please do not remove the tags attached to the product.
Light-emitting part during lighting, please do not look directly.
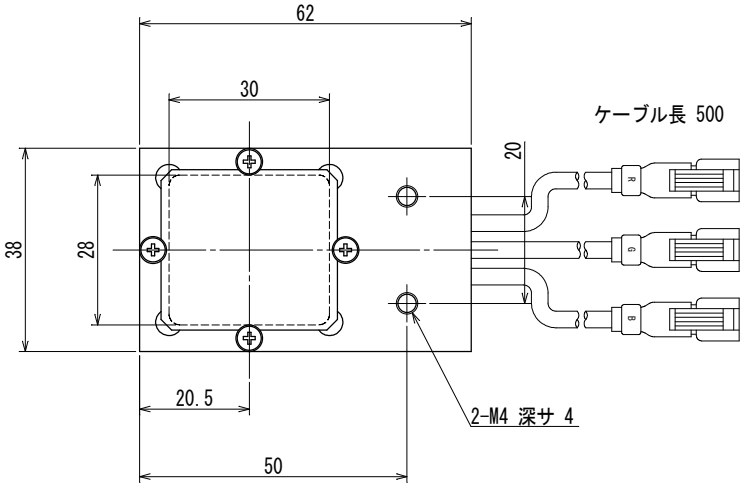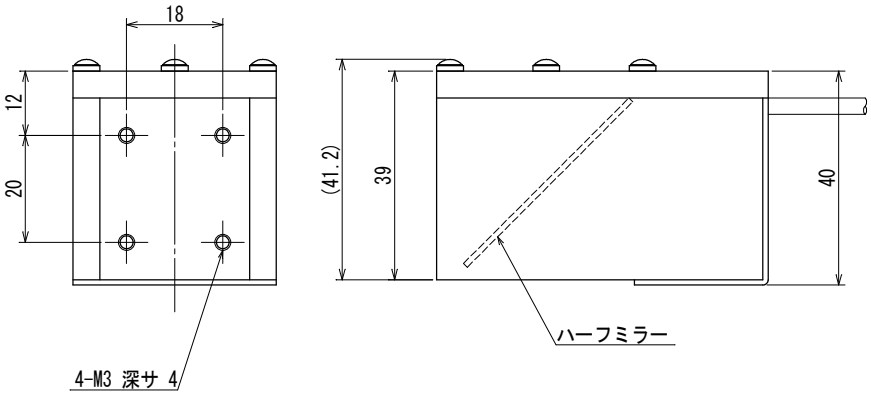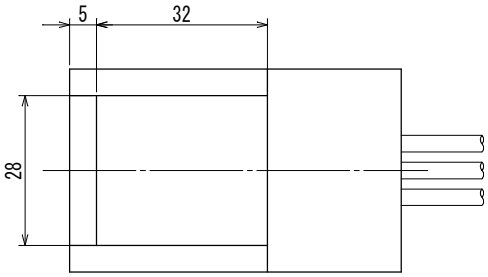
(注)製品に取り付けられているタグは外さないでください
点灯中の発光部は、直視しないでください